PUBLISHED: 16-AUG-2017
2017.0 DISCOVERY (LR), 308-07

TRANSFER CASE - [+] TWIN SPEED TRANSFER CASE

TRANSFER CASE REAR OUTPUT SHAFT BEARING (G1947977)

REMOVAL AND INSTALLATION

41.20.19	BEARING - REAR OUTPUT SHAFT - RENEW	3000 CC, AJ V6 (AJ126), SINGLE SPEED TRANSFER CASE	5	USED WITHINS	
41.20.19	BEARING - REAR OUTPUT SHAFT - RENEW	3000 CC, AJ V6 (AJ126), TWIN SPEED TRANSFER CASE	5.7	USED WITHINS	

transmissionmanuals.com

SPECIAL TOOL(S)



204-525-1

Replacer, Drive Flange



205-726

Remover/Installer, Wheel Hub Bearing



308-637

Installer

transmissionmanuals.com



JLR-308-927

Support Tool, Transfer Case

PART(S)

STEP	PART NAME	QUANTITY
Installation Step 2	Transfer case rear output shaft bearing	1

REMOVAL

NOTE:

- Some variation in the illustrations may occur, but the essential information is always correct.
- Some components shown removed for clarity.

1. Disconnect the battery ground cable.
   Refer to: Specifications (414-00 Battery and Charging System - General Information, Specifications).

transmissionmanuals.com

2.

WARNING:

Make sure to support the vehicle with axle stands.

Raise and support the vehicle.

3. Remove the transfer case.
Refer to: Transfer Case - V6 S/C 3.0L Petrol (308-07 Transfer Case - [+] Twin Speed Transfer Case, Removal).
Refer to: Transfer Case - TDV6 3.0L Diesel (308-07 Transfer Case - [+] Twin Speed Transfer Case, Removal).
Refer to: Transfer Case - INGENIUM I4 2.0L Diesel (308-07 Transfer Case - [+] Twin Speed Transfer Case, Removal).

4. With assistance, secure the transfer case with its transmission mating face down on a flat surface.

5.

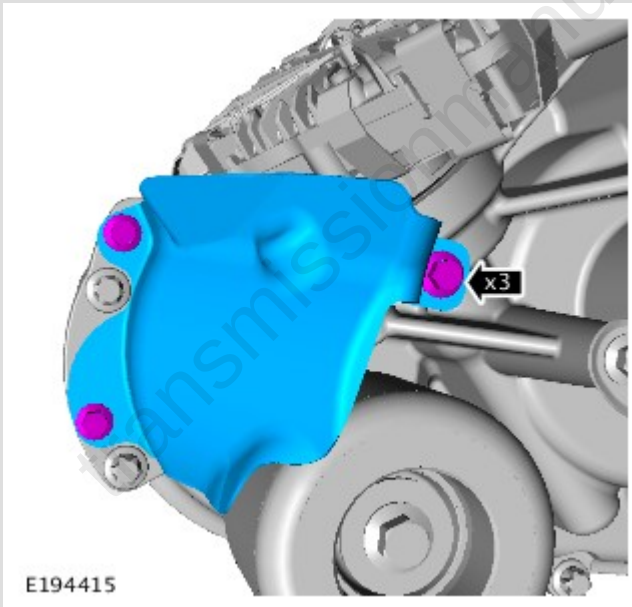

If equipped, remove the heat shield.

transmissionmanuals.com

6.

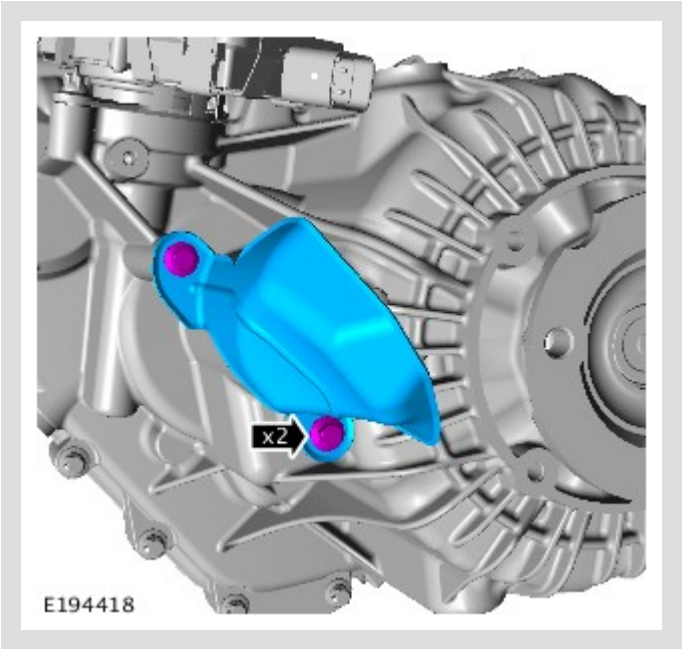

If equipped, remove the heat shield.

7.

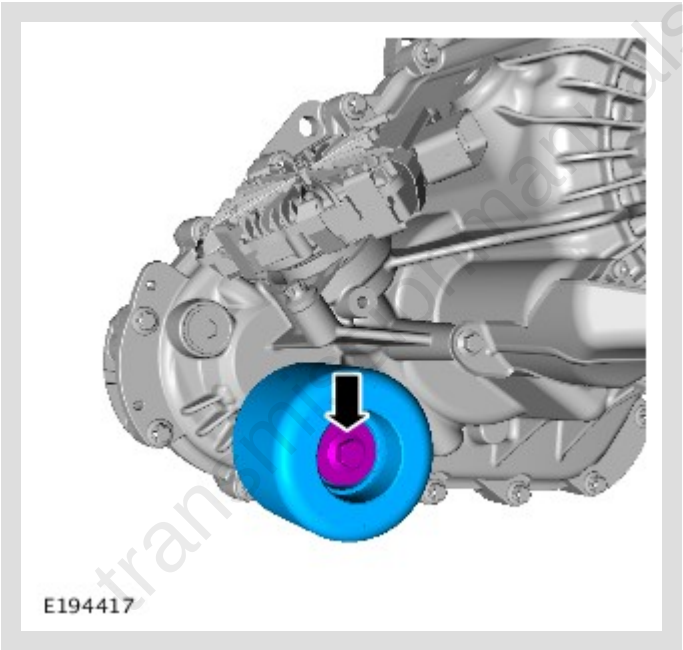

Remove the damper.

transmissionmanuals.com

8.

CAUTION:

Make sure the bolt holes are clean and free of swarf.

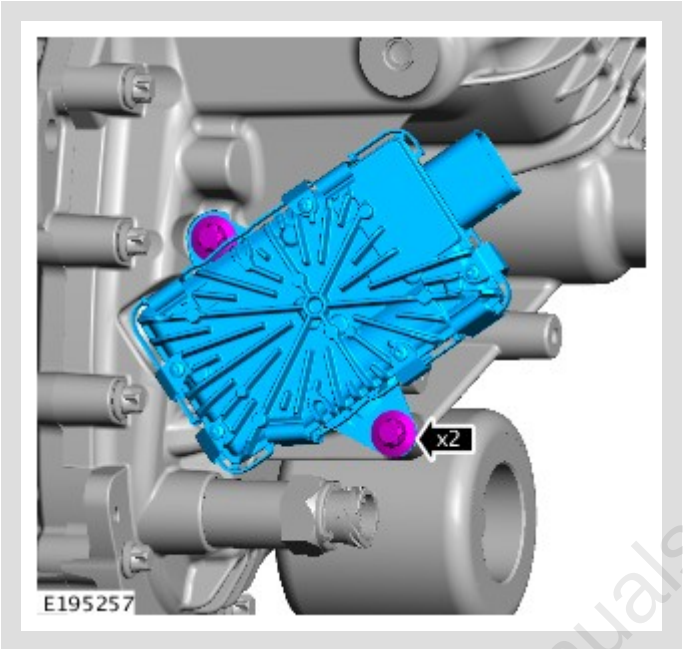

Remove the motor.

9.

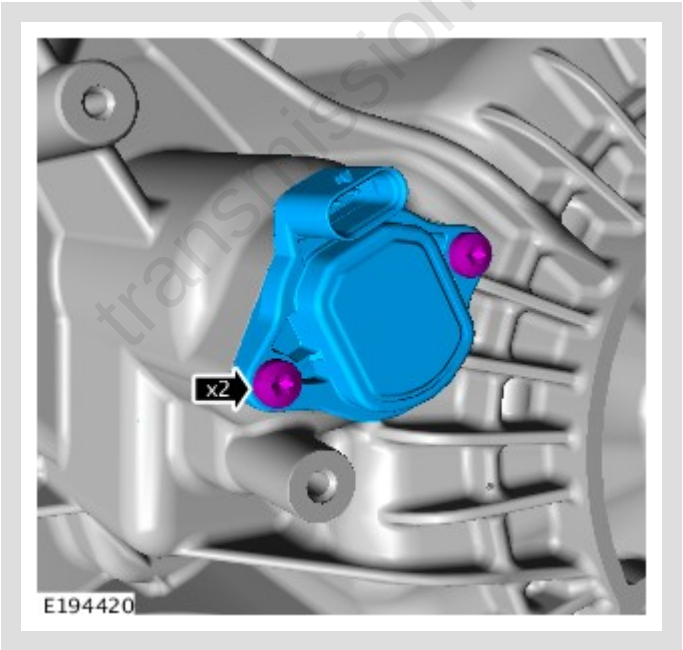

Remove the sensor.

transmissionmanuals.com

10.

CAUTION:

Make sure the bolt holes are clean and free of swarf.



Remove the 19 transfer box case bolts.

11.

CAUTION:

Care must be taken when turning the transfer case over. The transfer case halves must not be allowed to separate.

With assistance, release the transfer case and secure with the rear face of the transfer case facing down on a flat surface.

transmissionmanuals.com

12.

CAUTION:

Care must be taken to avoid damage to the mating surfaces.



Using a soft faced mallet, release the front casing.

13. Remove the sealant from the transfer case mating faces.

transmissionmanuals.com

14.

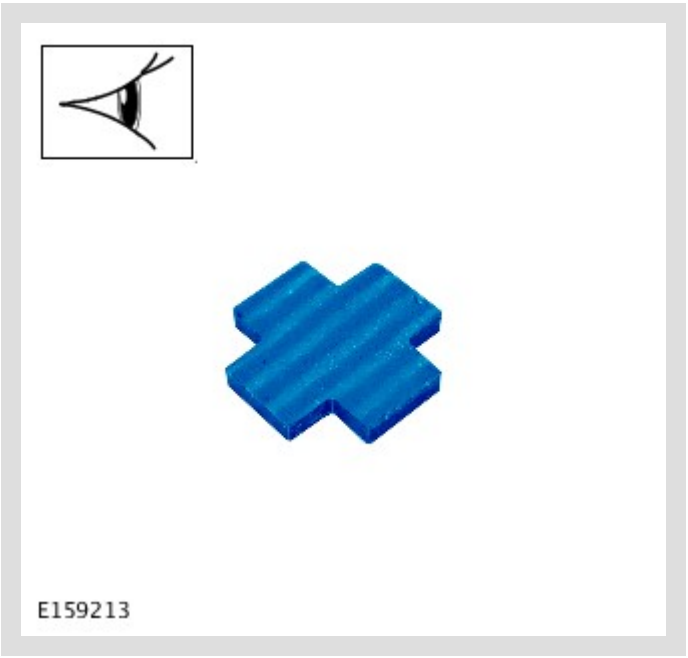

Locate the magnetic filter. The filter may have dropped into the front housing in the previous step.

15.

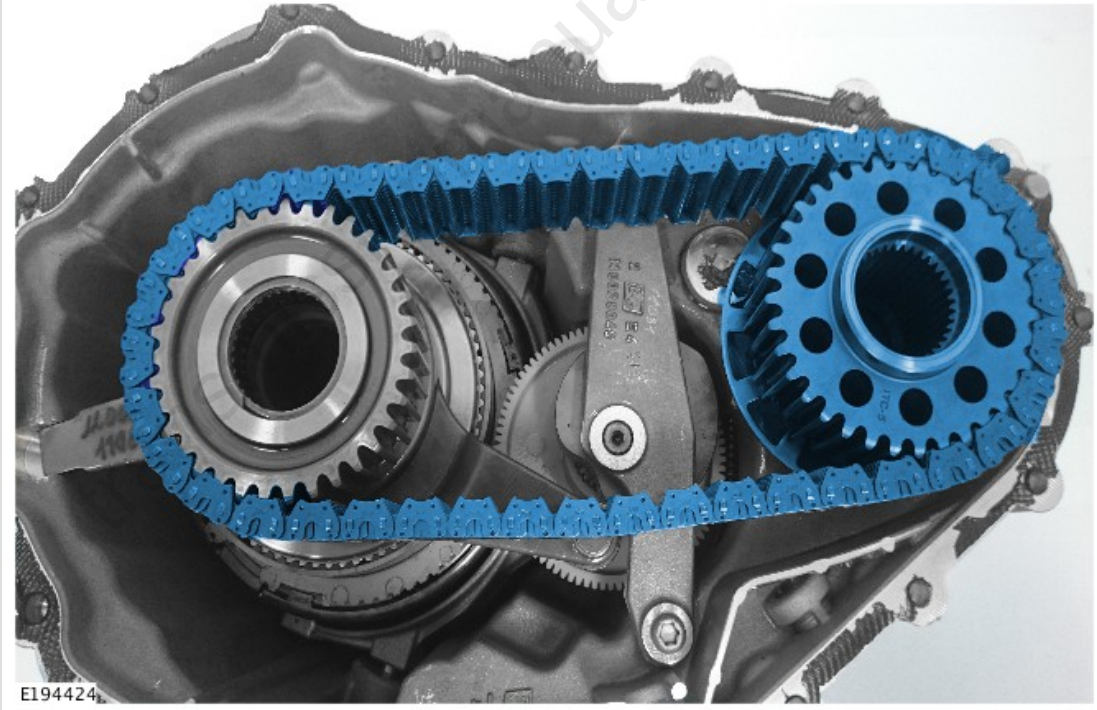

Remove the transfer case chain assembly.

16.



17.

CAUTION:

Note the fitted position of the component prior to removal.

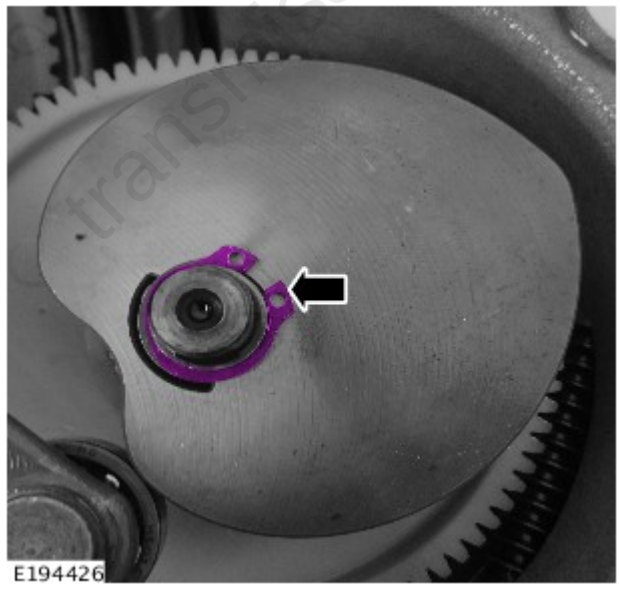

Remove and discard the circlip.

18.

CAUTION:

Note the fitted position of the component prior to removal.

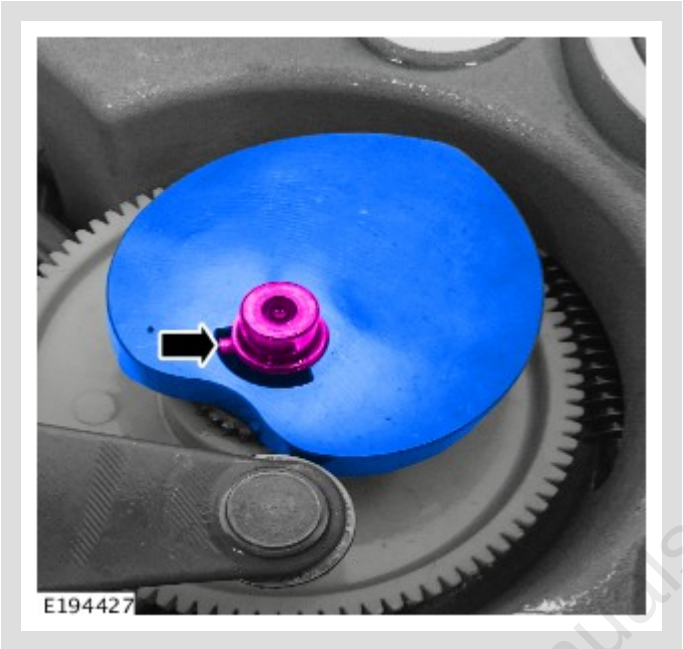

19.

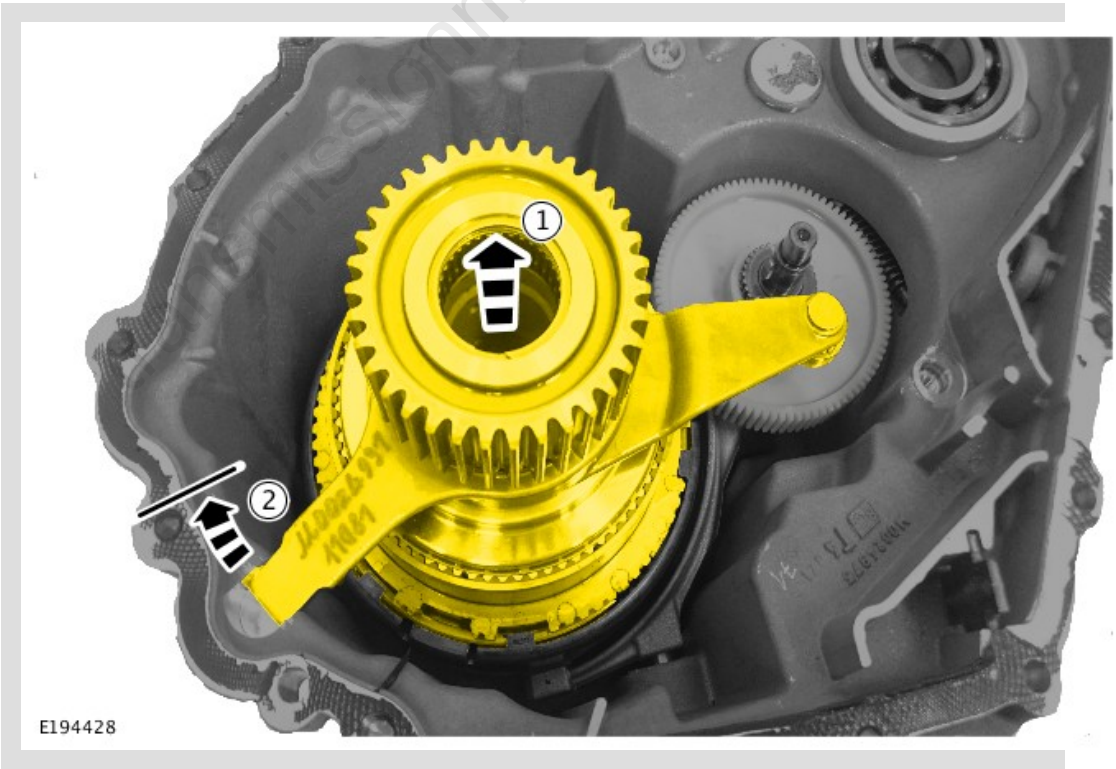

Raise and rotate the transfer differential assembly to the position shown in the illustration.

mitsubishimanuals.com

20.

CAUTION:

Note the fitted position of the component prior to removal.



Remove and discard the circlip.

21.

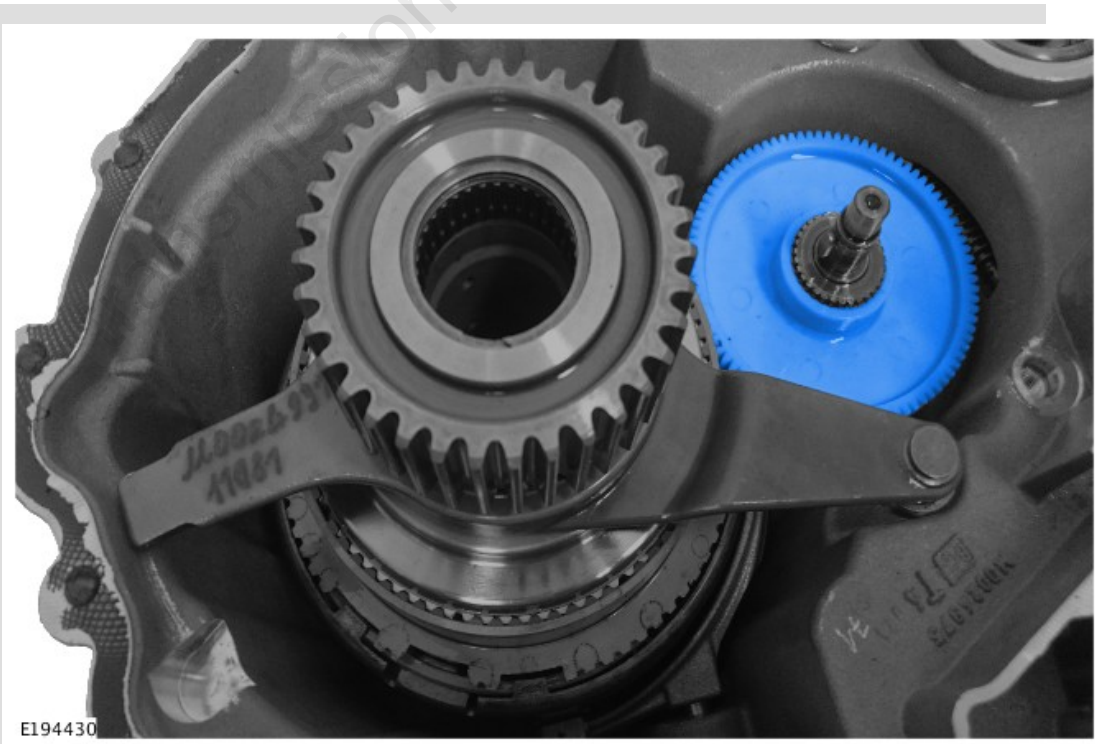

Remove the gear assembly.

22.



Remove the transfer differential assembly.

23.

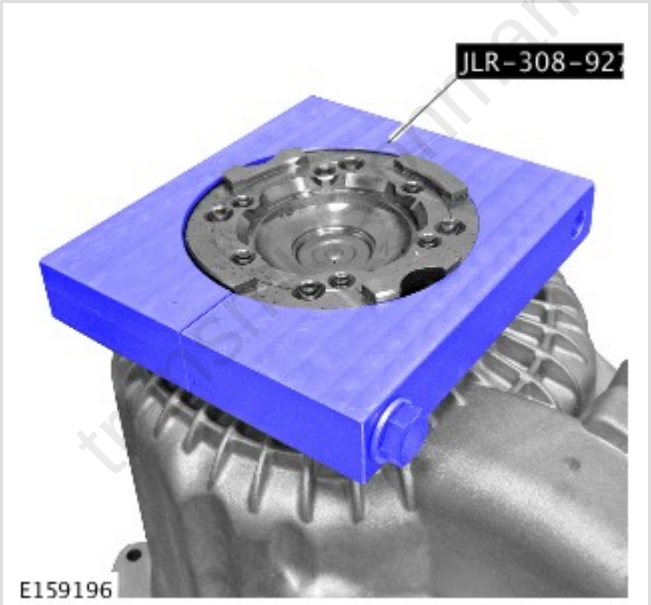

Install the special tool.

Special Tool(s): JLR-308-927

24.

CAUTION:

Note the fitted position of the component prior to removal.

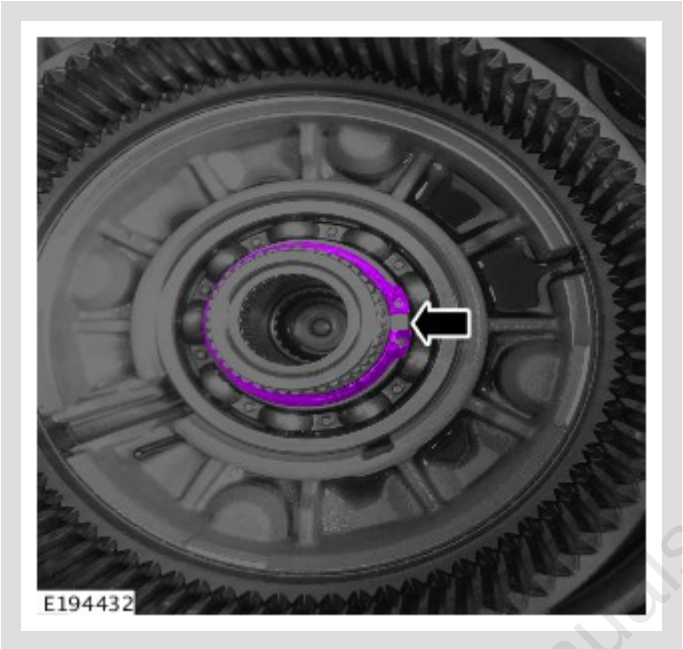

Remove and discard the circlip.

transmissionmanuals.com

25.

CAUTION:

Do not use excessive force whilst removing the flange assembly.



Remove the rear output shaft and flange assembly.

26.



Using a suitable tool, remove and discard the oil seal.

vansionmanuals.com

27.

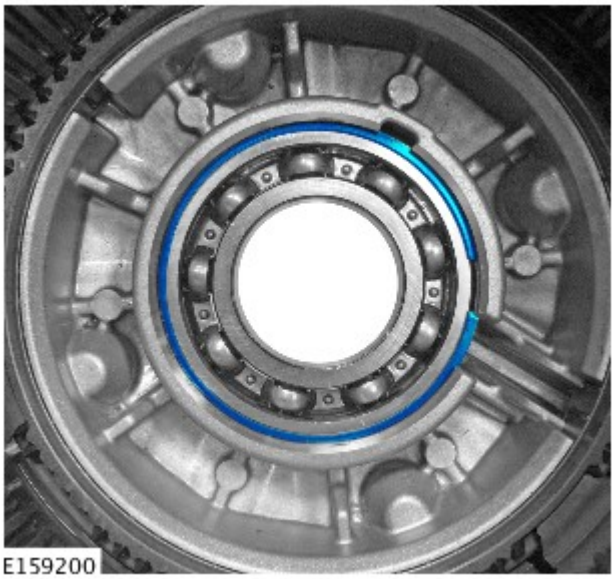

Remove the circlip.

28.

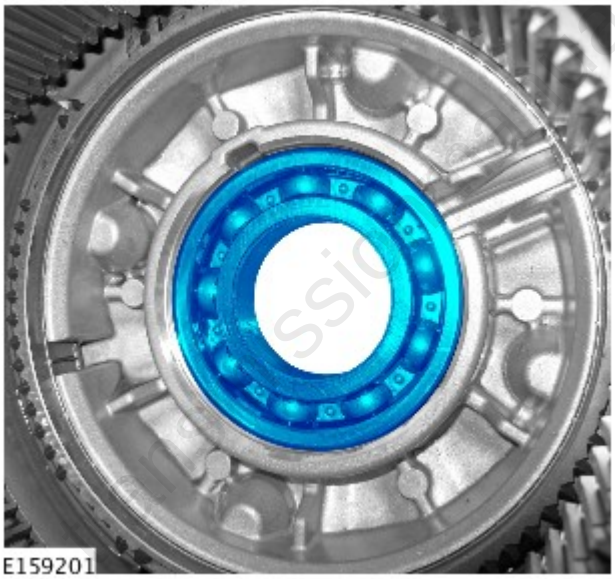

Remove the bearing

INSTALLATION

1.

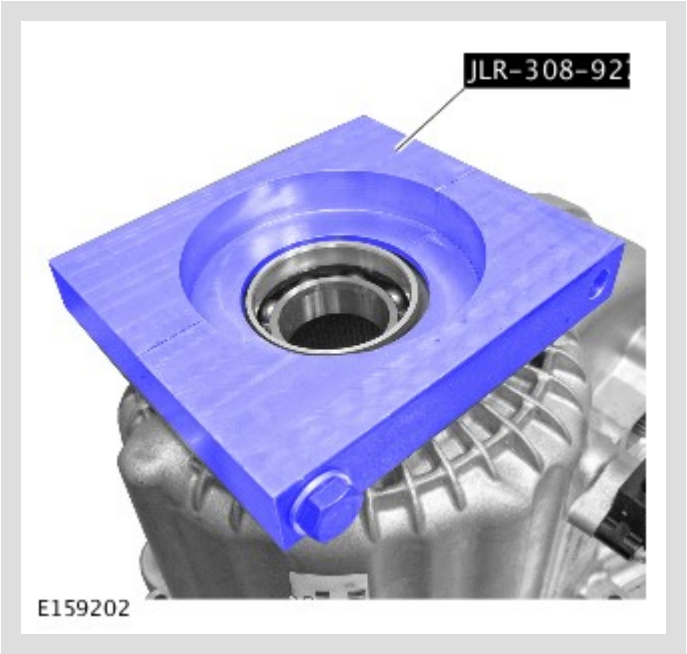

Position the special tool as shown, to support the transfer case during the next step.

Special Tool(s): JLR-308-927

transmissionmanuals.com

2.

CAUTION:

The chamfer on the bearing inner track must face the seal.



- Install the new bearing from the kit.
  Special Tool(s): 205-726
  Renew Part: *Transfer case rear output shaft bearing* *Quantity:* *1* .

transmissionmanuals.com

3.

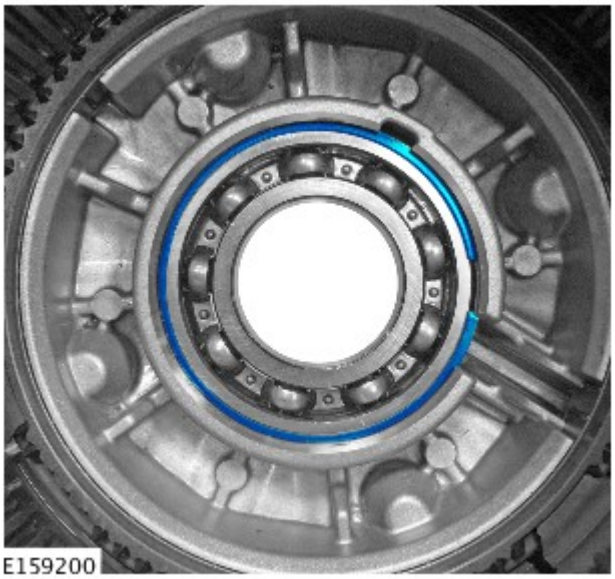

Install the circlip from the baring kit.

4.



- Install the seal from the kit.
  Special Tool(s): 308-637

carmanuals.com

5.



Using the special tool and with assistance, install the drive flange.
Special Tool(s): 204-525-1

6.

NOTE:

Check that the circlip is fully engaged.

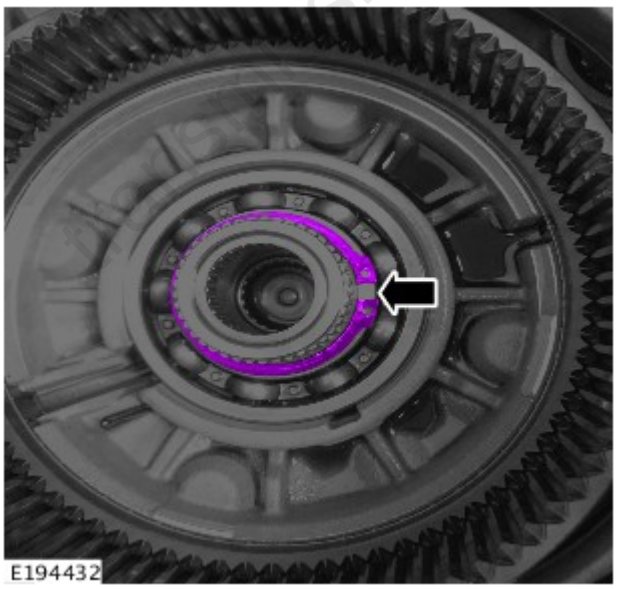

- Install the circlip from the kit.

7.

NOTE:

Rotate the differential to engage the splines.



Install the transfer differential assembly.

8.

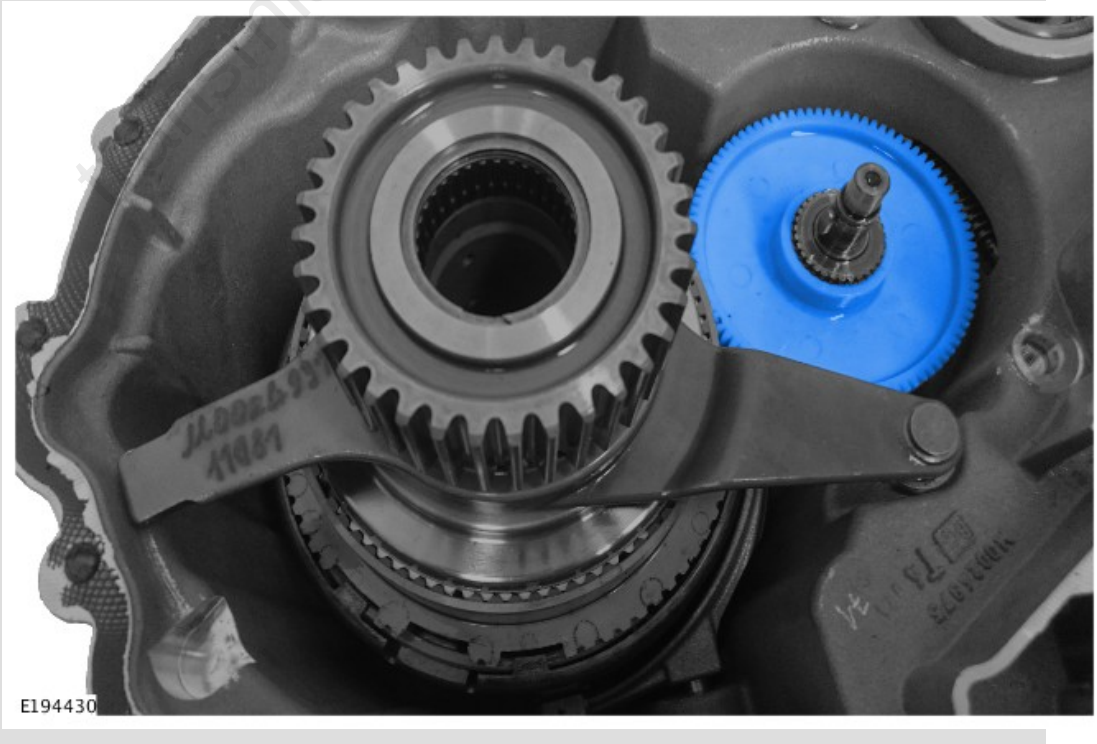

Install the gear assembly.

9.

NOTE:

Check that the circlip is fully engaged.

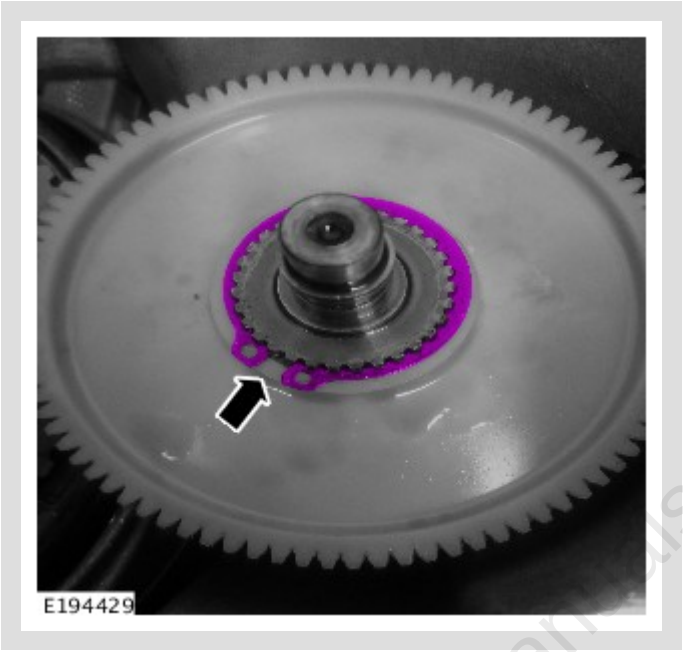

- Install a new circlip.

transmissionmanuals.com

10.

NOTE:

Make sure that the component is installed to the noted removal position.

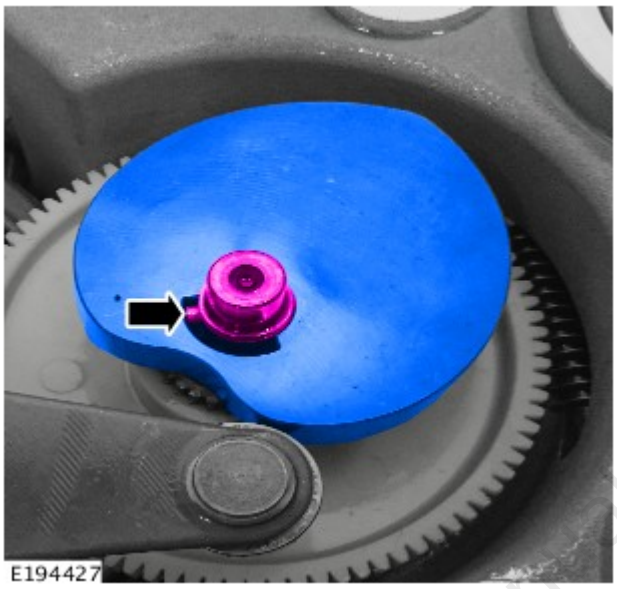

transmissionmanuals.com

11.

NOTE:

Check that the circlip is fully engaged.

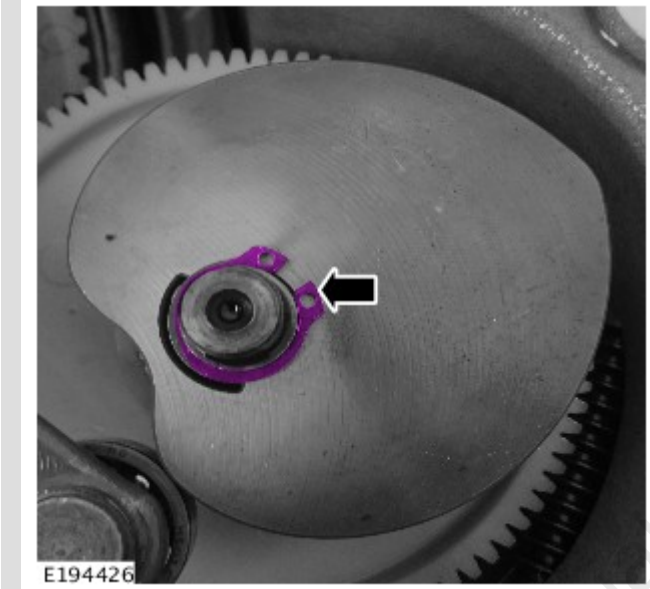

- Install the circlip from the bearing kit.

12.

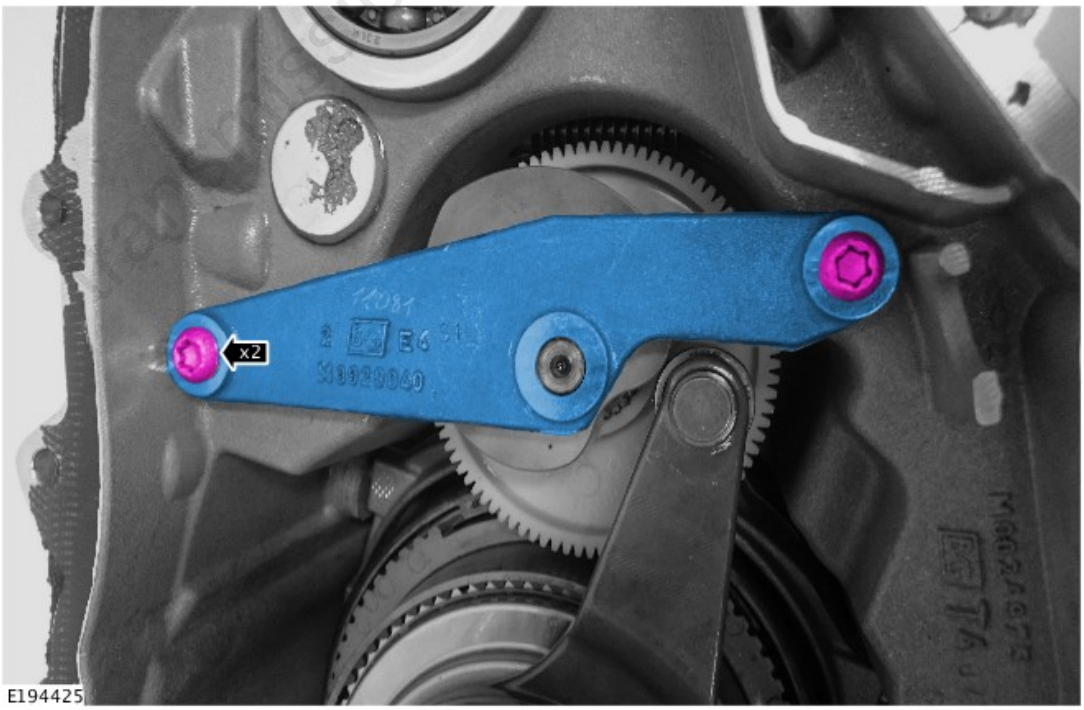

Torque: **15 Nm**

13.

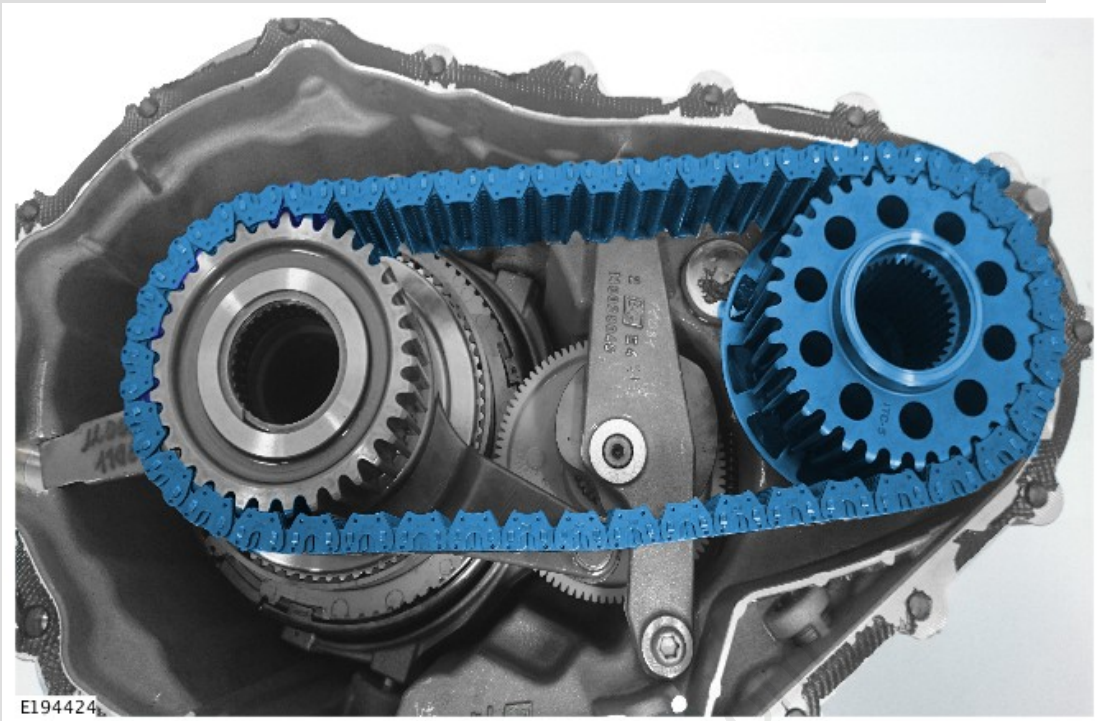

Install the transfer case chain assembly.

14.

CAUTION:

Make sure that the component is clean and free of foreign material .



Install the magnetic filter.

transmissionmanuals.co

15.

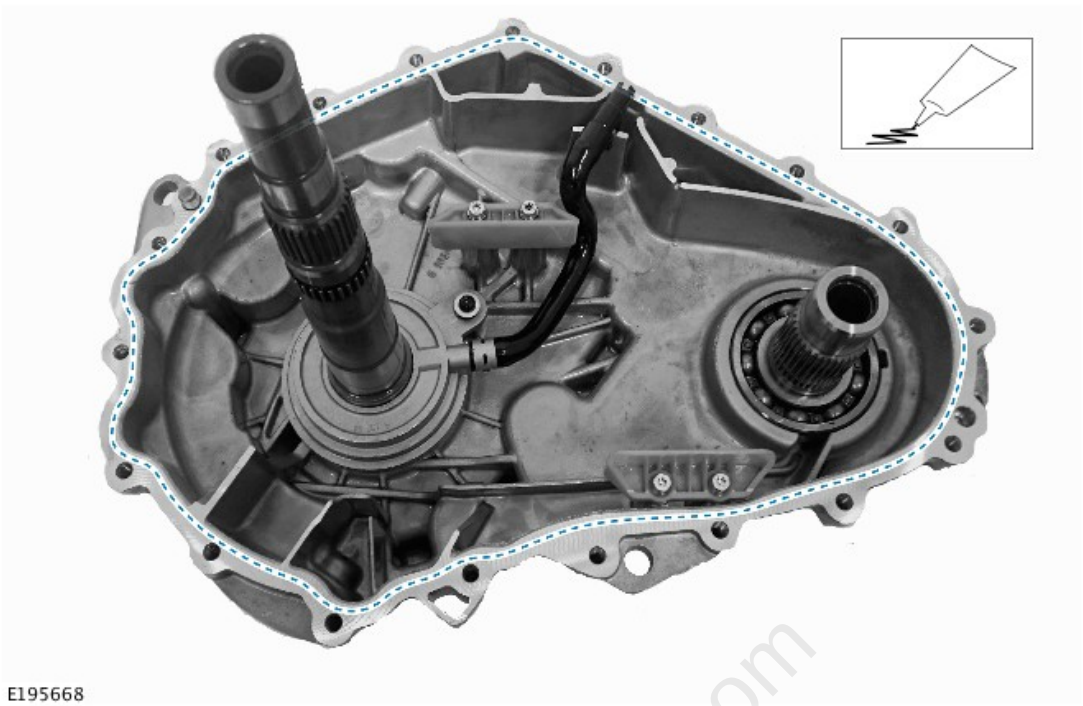

Apply a 2 mm bead of sealant to one surface of the transfer case mating face, as shown.
Refer to: Specifications (308-07 Transfer Case - [+] Twin Speed Transfer Case, Specifications).

transmissionmanuals.com

16.

CAUTION:

- Make sure that the input shaft spacer is located correctly.
- The input shaft and fluid pump assembly must be supported and held in place by hand, until it is located securely into the clutch assembly.

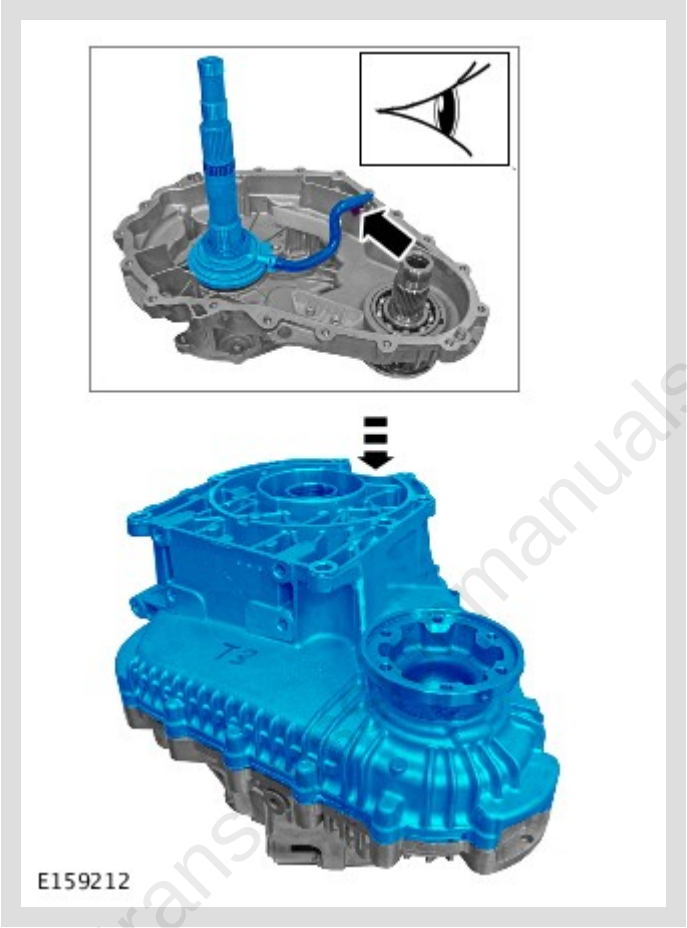

Install the front half of the transfer case.

17.

CAUTION:

Care must be taken when turning the transfer case over. The transfer case halves must not be allowed to separate.

With assistance, release the transfer case and secure with its transmission mating face down on a flat surface.

18.

CAUTION:

Only tighten the bolts finger-tight at this stage.

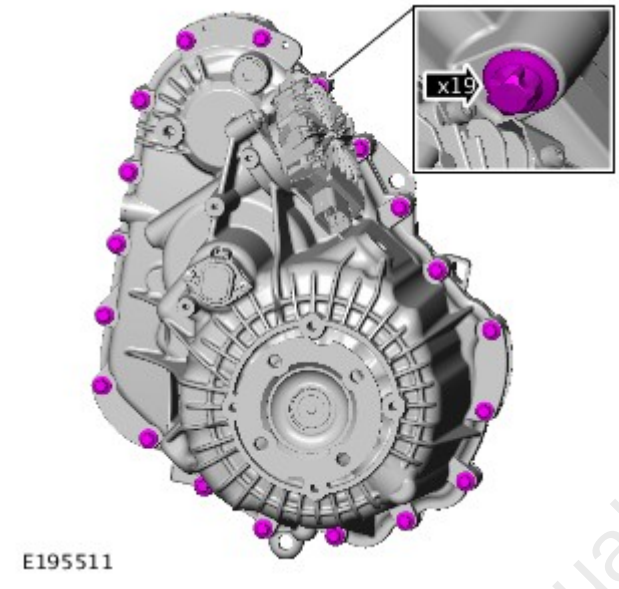

Install the 19 transfer box case bolts.

19.

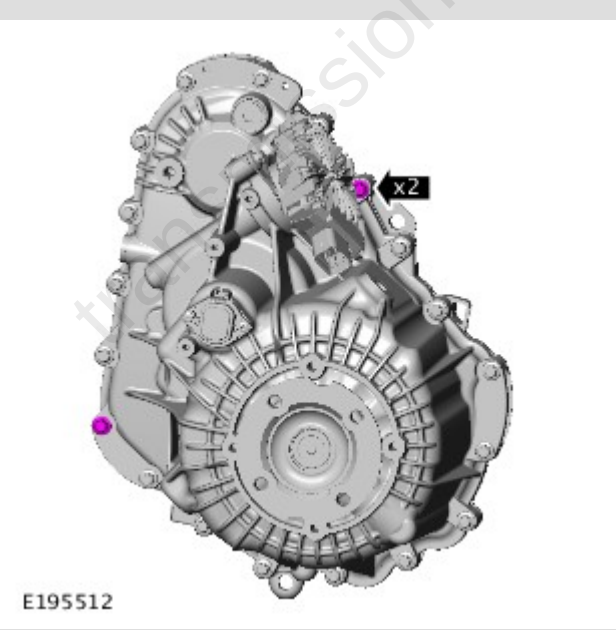

Torque: **10 Nm**

20.

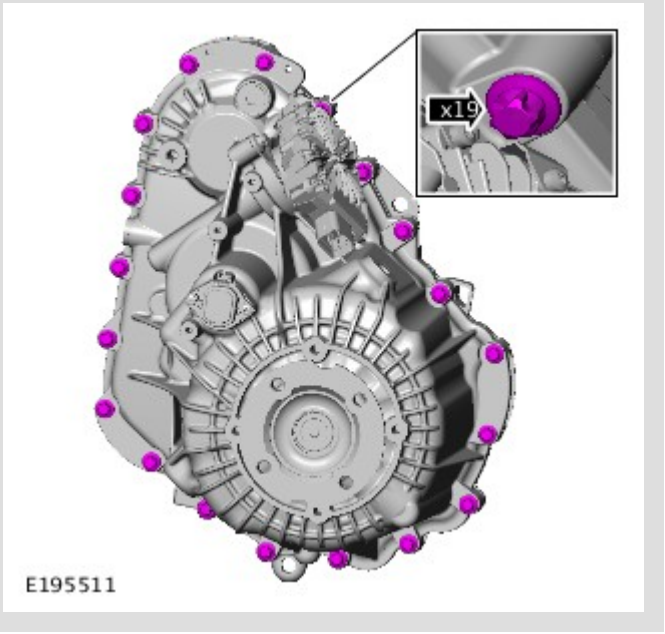

Fully tighten the 19 transfer box case bolts.

Torque: **35 Nm**

21.

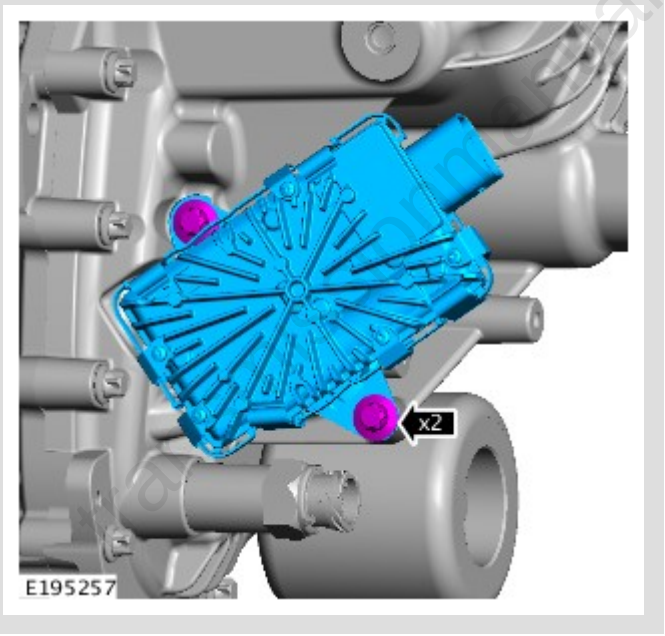

Install the motor.

Torque: **35 Nm**

22.

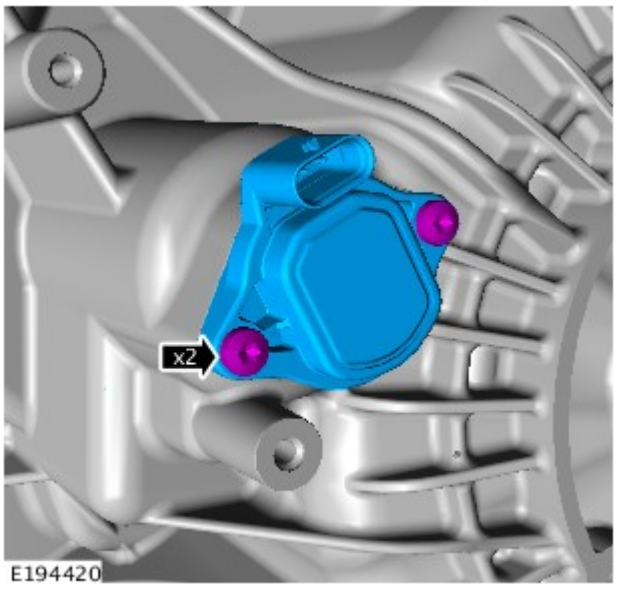

Remove the sensor.

Torque: **5 Nm**

23.

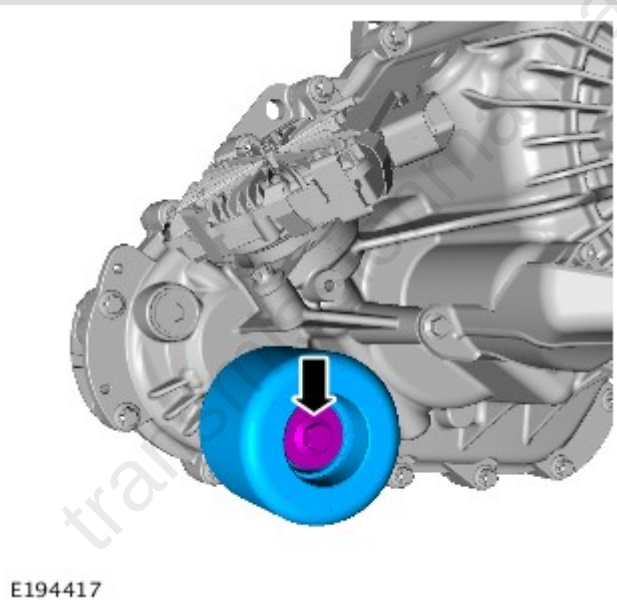

Torque: **75 Nm**

transmissionmanuals.com

24.

NOTE:

This step is only required if previously removed.

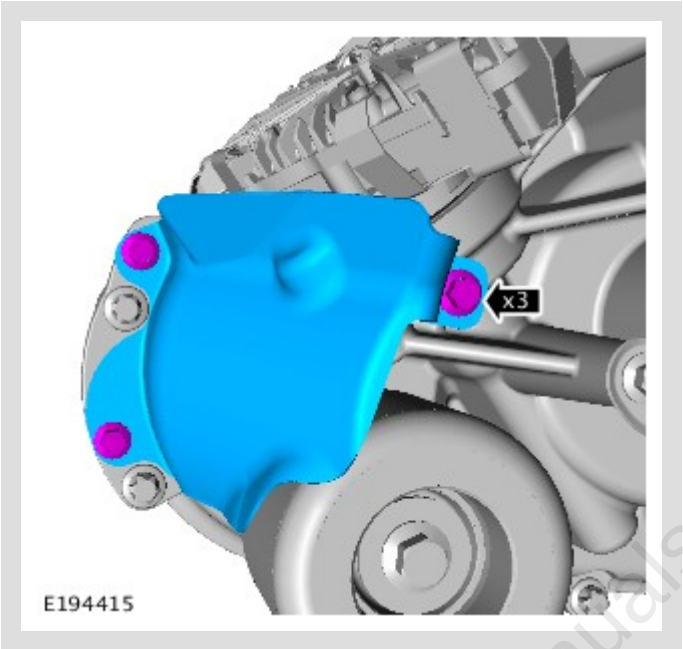

Install the heat shield.

Torque: **8 Nm**

transmissionmanuals.com

25.

NOTE:

This step is only required if previously removed.

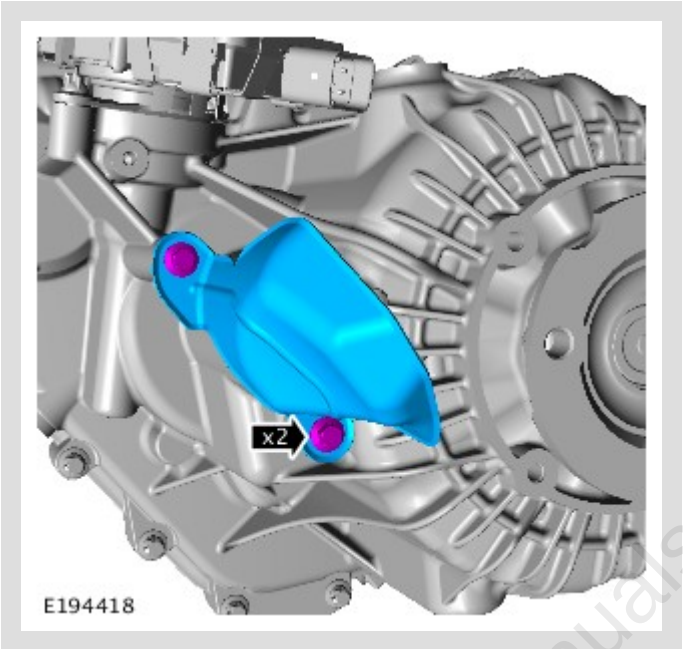

Install the heat shield.
Torque: **8 Nm**

26. With assistance, release the transfer case from the flat surface.

27. Install the transfer case.
Refer to: Transfer Case - V6 S/C 3.0L Petrol (308-07 Transfer Case - [+] Twin Speed Transfer Case, Installation).
Refer to: Transfer Case - TDV6 3.0L Diesel (308-07 Transfer Case - [+] Twin Speed Transfer Case, Installation).
Refer to: Transfer Case - INGENIUM I4 2.0L Diesel (308-07 Transfer Case - [+] Twin Speed Transfer Case, Installation).

28. Connect the battery ground cable.
Refer to: Specifications (414-00 Battery and Charging System - General Information, Specifications).

transmissionmanuals.com

29.

- Connect the Land Rover approved diagnostic equipment.
- Start the diagnostic service function "transfer case-transfer case control module replacement".
- Start the service function "transfer case-absolute position sensor replacement".
- Clear any Diagnostic Trouble Codes (DTCs) after calibration and check for correct operation.

transmissionmanuals.com